KAIST develops wireless power transfer tech for high capacity transit

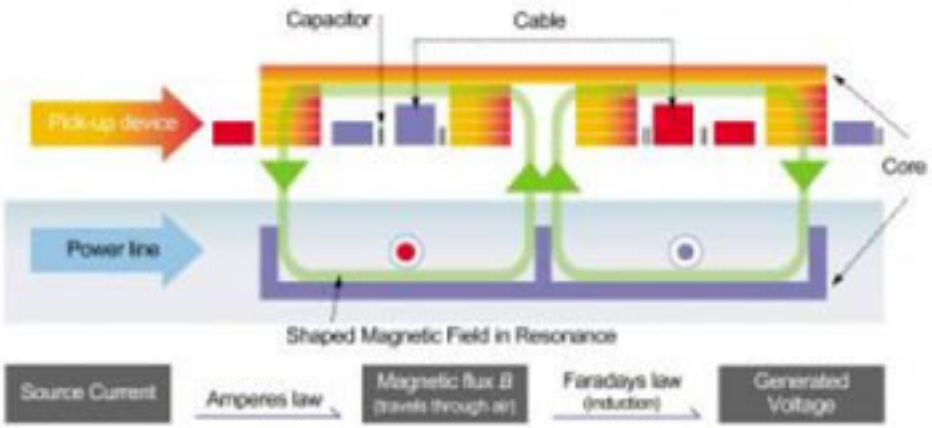

The Korea Advanced Institute of Science and Technology (KAIST) and the Korea Railroad Research Institute (KRRI) have developed a wireless power transfer technology that can be applied to high capacity transportation systems such as railways, harbor freight, and airport transportation and logistics. The technology supplies 60 kHz and 180 kW of power remotely to transport vehicles at a stable, constant rate.

KAIST and KRRI today successfully showcased the wireless power transfer technology to the public by testing it on the railroad tracks at Osong Station in Korea. Originally, this technology was developed as part of an electric vehicle system introduced by KAIST in 2011 known as the On-line Electric Vehicle (OLEV).

OLEV does not need to be parked at a charging station to have a fully powered battery. It gets charged while running, idling, and parking, enabling a reduction in size of the reserve battery down to one-fifth of the battery on board a regular electric car. The initial models of OLEV, a bus and a tram, receive 20 kHz and 100 kW power at an 85% transmission efficiency rate while maintaining a 20cm air gap between the underbody of vehicle and the road surface. OLEV complies with the national and international standards of 62.5 mG, a safety net for electromagnetic fields. In July 2013, for the first time since its development, OLEV will run on a regular road, an inner city route in the city of Gumi, requiring 40 minutes of driving each way.

Today's technology demonstration offers further support that OLEV can be utilized for large-scale systems. Professor Dong-Ho Cho, Director of Center for Wireless Power Transfer Technology Business Development at KAIST, explained the recent improvements to OLEV:

"We have greatly improved the OLEV technology from the early development stage by increasing its power transmission density by more than three times. The size and

weight of the power pickup modules have been reduced as well. We were able to cut down the production costs for major OLEV components, the power supply, and the pickup system, and in turn, OLEV is one step closer to being commercialized."

If trains receive power wirelessly, the costs of railway wear and tear will be dramatically reduced. There will be no power rails, including electrical poles, required for the establishment of a railway system, and accordingly, lesser space will be needed. Tunnels will be built on a smaller scale, lowering construction costs. In addition, it will be helpful to overcome major obstacles that discourage the construction of high speed railway systems such as noise levels and problems in connecting pantograph and power rails.

KAIST and KRRI plan to apply the wireless power transfer technology to trams in May and high speed trains in September.
[1]
Source: The Korea Advanced Institute of Science and Technology (KAIST) [2]

Source URL (retrieved on *05/02/2016 - 8:37am*):
http://www.rdmag.com/news/2013/02/kaist-develops-wireless-power-transfer-tech-high-capacity-transit

Links:
[1] http://www.engineering.utoronto.ca/home.htm
[2] http://www.kaist.edu/english/